RODAJAS DE VASTAGO CIEGO O INTERCAMBIABLE

The Durable Superior Casters® selection of modular stem series provides a vast array of custom and hard to find stem options offered in some of our most popular caster series: each having their own unique design, look and functionality. Casters may be purchased with the stems already installed or as separate parts: stem & lock nut and or complete caster with a hollow kingpin (without stem installed) enables the customer to install the caster using their own hardware or by incorporating one of our modular stems. Applications include use on: food processing & bakery equipment, laboratory and pharmaceutical equipment, institutional & medical equipment, shelving & racking, conveyors, service & maintenance carts, computer & diagnostic equipment and carts, etc.

- Modular design offers flexibility in design with a variety of standard and hard to find stem options.
- Casters have a ½" Hollow kingpin hole in the center to install a variety of stems.
- Double ball raceways offer improved swiveling action and durability.
- Standard Zinc plated finish is attractive and corrosion resistant.
- Casters available with and without dust cap raceways, various overall heights and brake options.
- Majority of series and wheel types are NSF Listed.

TRY DuraQuick™ Shipping
Expedite 24Hr.
Expedited Factory Drop Ship Service - On In Stock Parts.

Brake Options

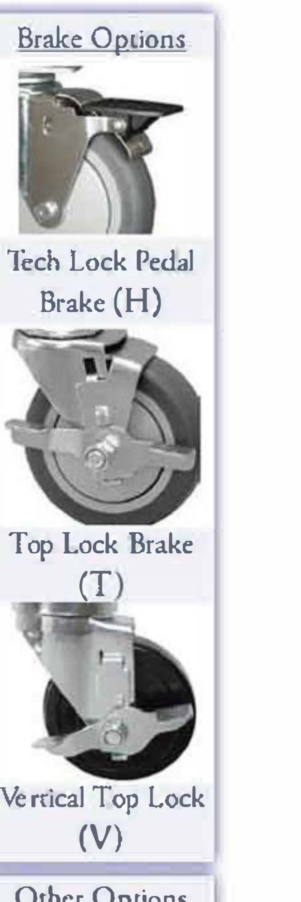

Other Options	
Thread Gaurds	G
High Temp Grease	K
Zerk Axle	Z

Modular Stem Options

See page 26 for Drawings.

Fastening Options (Replace ** in part number with desired plate or stem code)

Order modular stems Installed with stem code -or uninstalled by part#

Stem Code	Size	Stem Type	Modular Part#	Stem Code	Size	Stem Type	Modular Part#
ZZ	1/2"	Hollow Kingpin (Actual I.D. .515)	NA	87	3/4-10 x 1-3/4	Threaded	07STT87
33	7/16-14 x 1-1/2	Threaded	07STT33	92	5/8 x 2-3/16	Dual Grip Ring	07STG92
43	9/16 x 2-15/16	Square- 2 cross holes	07STS43	93	13/16 x 2-3/16	Dual Grip Ring	07STG93
55	.87 x 2	*Square- 3 cross holes	07STS55	C1	1/2-13 X 4	Threaded	07STTC1
56	.87 x 2	*Square- 3 cross holes	07STS56	C2	5/8-11 x 4	Threaded	07STTC2
81	5/8-11 x 1-3/4	Threaded	07STT81	C3	3/4 -10 x 6	Threaded	07STTC3
84	3/4-10 x 4	Threaded	07STT84				

*These square stems have rounded corners. 55 stem diagonal cross section is 1.087 and 56 stem diagonal cross section is .983

NSF LISTED

RoHS Compliant

RODAJAS DE VASTAGO CIEGO O INTERCAMBIABLE

4 Caster Styles to choose from! Replace the ** in the Caster Part# with the desired modular stem fastener code from the table on the opposite page. Casters may also be purchased with the 1/2" Hollow Kingpin option (ZZ) to use your own fastener or to install modular stem yourself.

Dia.	Tread	Wheel Type	Load Cap.	Bearing Type	07 Series Swivel Caster	O.H.	S.R.	17 Series Total-lock Caster	O.H.	S.R.	75 Series Swivel Caster	O.H.	S.R.	T3 Series Total-Lock Casters	O.H.	S.R.	+Color
3	1-1/4	Soft Rubber	175	Plain	07SR30GB82**YY	4	3	17SR30GB82**YY	4-1/8	4-5/16	75SR30GB82**YY	4	2-7/8	T3SR30GB82**YY	4	4-7/8	
		Soft Rubber	200	Ball	07SR30GB42**YY			17SR30GB42**YY			75SR30GB42**YY			T3SR30GB42**YY			
		Nomadic™	230	Annular	07NM30GI43**YY			17NM30GI43**YY			75NM30GI43**YY			T3NM30GI43**YY			
		Thermo-Pro™	210	Ball	07TP30GI44**YY			17TP30GI44**YY			75TP30GI44**YY			T3TP30GI44**YY			
		Thermo-Pro™	210	Ball	07TP30G+47**YY			17TP30G+47**YY			75TP30G+47**YY			T3TP30G+47**YY			T,Y
		Thermo-Pro™	210	Sleeve	07TP30G+90**YY			17TP30G+90**YY			75TP30G+90**YY			T3TP30G+90**YY			T,Y
		Poly-Pro™	250	Ball	07PP30G+42**YY			17PP30G+42**YY			75PP30G+42**YY			T3PP30G+42**YY			A,K,W
		Poly-Pro™	250	Ball	07PP30G+44**YY			17PP30G+44**YY			75PP30G+44**YY			T3PP30G+44**YY			A,D,I,S,V
		Poly-Pro™	250	Delrin	07PP30G+55**YY			17PP30G+55**YY			75PP30G+55**YY			T3PP30G+55**YY			K,W
		Poly-Pro™	250	Ball	07PP30G+47**YY			17PP30G+47**YY			75PP30G+47**YY			T3PP30G+47**YY			T,Y,W
		Poly-Pro™	250	Sleeve	07PP30G+90**YY			17PP30G+90**YY			75PP30G+90**YY			T3PP30G+90**YY			T,Y
		Polymadic™	260	Annular	07PM30GM43**YY			17PM30GM43**YY			75PM30GM43**YY			T3PM30GM43**YY			
		DuraLastomer®	300	Sleeve	07SU30GL90**YY			17SU30GL90**YY			75SU30GL90**YY			T3SU30GL90**YY			
		Polyon AL™	350	Annular	07PA30GL43**YY			17PA30GL43**YY			75PA30GL43**YY			T3PA30GL43**YY			
		Hard Rubber	250	Ball	07HR30GB42**YY			17HR30GB42**YY			75HR30GB42**YY			T3HR30GB42**YY			
		Hard Rubber	250	Plain	07HR30GB82**YY			17HR30GB82**YY			75HR30GB82**YY			T3HR30GB82**YY			
		Polyolefin	250	Plain	07PO30G+82**YY			17PO30G+82**YY			75PO30G+82**YY			T3PO30G+82**YY			B,Z
		Polyolefin	300	Sleeve	07PO30G+90**YY			17PO30G+90**YY			75PO30G+90**YY			T3PO30G+90**YY			J,Z
		Polyolefin	300	Ball	07PO30GZ42**YY			17PO30GZ42**YY			75PO30GZ42**YY			T3PO30GZ42**YY			
		H.D Polyolefin	300	Plain	07HP30G+82**YY			17HP30G+82**YY			75HP30G+82**YY			T3HP30G+82**YY			B,E
		Nylon	300	Plain	07NY30GE82**YY			17NY30GE82**YY			75NY30GE82**YY			T3NY30GE82**YY			
		Nylon	300	Ball	07NY30GE42**YY			17NY30GE42**YY			75NY30GE42**YY			T3NY30GE42**YY			
		Phenolic	300	Top Hats	07PH30GB99**YY			17PH30GB99**YY			75PH30GB99**YY			T3PH30GB99**YY			
		Phenolic	350	Roller	07PH30HB03**YY			17PH30HB03**YY			75PH30HB03**YY			T3PH30HB03**YY			
		H.T. Phenolic	200	Top Hats	07HT30GQ99**YY			17HT30GQ99**YY			75HT30GQ99**YY						
		BrimStone®	350	Top Hats	07GN30GQ99**YY			17GN30GQ99**YY			75GN30GQ99**YY						
		Semi-Steel	300	Plain	07SS30GS82**YY			17SS30GS82**YY			75SS30GS82**YY			T3SS30GS82**YY			
		Sintered Iron	300	Plain	07SI30GS82**YY			17SI30GS82**YY			75SI30GS82**YY			T3SI30GS82**YY			
		V-Groove	300	Plain	07VG30GT82**YY			17VG30GT82**YY			75VG30GT82**YY			T3VG30GT82**YY			
3-1/2	1-1/4	Soft Rubber	200	Plain	07SR35GB82**YY	4-1/2	3-3/16	17SR35GB82**YY	4-5/8	4-5/16	75SR35GB82**YY	4-1/2	3-1/8	T3SR35GB82**YY	4-1/2	4-7/8	
		Rubber / Aluminum	250	Annular	07RA35GI43**YY			17RA35GI43**YY			75RA35GI43**YY			T3RA35GI43**YY			
		Nomadic™	250	Annular	07NM35GI43**YY			17NM35GI43**YY			75NM35GI43**YY			T3NM35GI43**YY			
		Thermo-Pro™	230	Ball	07TP35GI44**YY			17TP35GI44**YY			75TP35GI44**YY			T3TP35GI44**YY			
		Thermo-Pro™	230	Ball	07TP35G+47**YY			17TP35G+47**YY			75TP35G+47**YY			T3TP35G+47**YY			T,Y
		Thermo-Pro™	230	Sleeve	07TP35G+90**YY			17TP35G+90**YY			75TP35G+90**YY			T3TP35G+90**YY			T,Y
		Poly-Pro™	250	Ball	07PP35G+42**YY			17PP35G+42**YY			75PP35G+42**YY			T3PP35G+42**YY			A,I,K,W
		Poly-Pro™	250	Ball	07PP35G+44**YY			17PP35G+44**YY			75PP35G+44**YY			T3PP35G+44**YY			A,D,I,K,S,V
		Poly-Pro™	250	Delrin	07PP35G+55**YY			17PP35G+55**YY			75PP35G+55**YY			T3PP35G+55**YY			K,W
		Poly-Pro™	250	Ball	07PP35G+47**YY			17PP35G+47**YY			75PP35G+47**YY			T3PP35G+47**YY			T,W,Y
		Poly-Pro™	250	Sleeve	07PP35G+90**YY			17PP35G+90**YY			75PP35G+90**YY			T3PP35G+90**YY			T,Y
		Polymadic™	270	Annular	07PM35GM43**YY			17PM35GM43**YY			75PM35GM43**YY			T3PM35GM43**YY			
		Polyon AL™	350	Annular	07PA35GL43**YY			17PA35GL43**YY			75PA35GL43**YY			T3PA35GL43**YY			
		Hard Rubber	285	Plain	07HR35GB82**YY			17HR35GB82**YY			75HR35GB82**YY			T3HR35GB82**YY			
		Polyolefin	300	Plain	07PO35G+82**YY			17PO35G+82**YY			75PO35G+82**YY			T3PO35G+82**YY			B,Z
		Polyolefin	300	Sleeve	07PO35GJ90**YY			17PO35GJ90**YY			75PO35GJ90**YY			T3PO35GJ90**YY			
		Phenolic	350	Top Hats	07PH35GB99**YY			17PH35GB99**YY			75PH35GB99**YY			T3PH35GB99**YY			

RODAJAS DE VASTAGO CIEGO O INTERCAMBIABLE

4 Caster Styles to choose from! Replace the ** in the Caster Part# with the desired modular stem fastener code from the table on the opposite page. Casters may also be purchased with the 1/2" Hollow Kingpin option (ZZ) to use your own fastener or to install modular stem yourself.

Dia.	Tread	Wheel Type	Load Cap.	Bearing Type	07 Series Swivel Caster	O.H.	S.R.	17 Series Total-lock Caster	O.H.	S.R.	75 Series Swivel Caster	O.H.	S.R.	T3 Series Total-Lock Casters	O.H.	S.R.	+Color
4	1-1/4	Soft Rubber	220	Plain	07SR40GB82**YY	5	3-1/2	17SR40GB82**YY	5-1/8	4-5/16	75SR40GB82**YY	5	3-3/8	T3SR40GB82**YY	5	4-7/8	
		Soft Rubber	245	Ball	07SR40GB42**YY			17SR40GB42**YY			75SR40GB42**YY			T3SR40GB42**YY			
		Rubber / Aluminum	250	Annular	07RA40GI43**YY			17RA40GI43**YY			75RA40GI43**YY			T3RA40GI43**YY			
		Nomadic™	285	Annular	07NM40GI43**YY			17NM40GI43**YY			75NM40GI43**YY			T3NM40GI43**YY			
		Thermo-Pro™	250	Ball	07TP40GI44**YY			17TP40GI44**YY			75TP40GI44**YY			T3TP40GI44**YY			
		Thermo-Pro™	250	Ball	07TP40G+47**YY			17TP40G+47**YY			75TP40G+47**YY			T3TP40G+47**YY			T,Y
		Thermo-Pro™	250	Sleeve	07TP40G+90**YY			17TP40G+90**YY			75TP40G+90**YY			T3TP40G+90**YY			T,Y
		Poly-Pro™	275	Ball	07PP40G+42**YY			17PP40G+42**YY			75PP40G+42**YY			T3PP40G+42**YY			A,D,I,K,P,W
		Poly-Pro™	275	Ball	07PP40G+44**YY			17PP40G+44**YY			75PP40G+44**YY			T3PP40G+44**YY			A,D,I,S,V
		Poly-Pro™	275	Delrin	07PP40G+55**YY			17PP40G+55**YY			75PP40G+55**YY			T3PP40G+55**YY			K,W
		Poly-Pro™	275	Ball	07PP40GP42**YY			17PP40GP42**YY			75PP40GP42**YY			T3PP40GP42**YY			
		Poly-Pro™	275	Ball	07PP40G+47**YY			17PP40G+47**YY			75PP40G+47**YY			T3PP40G+47**YY			T,W,Y
		Poly-Pro™	275	Sleeve	07PP40G+90**YY			17PP40G+90**YY			75PP40G+90**YY			T3PP40G+90**YY			T,Y
		Polymadic™	325	Annular	07PM40GM43**YY			17PM40GM43**YY			75PM40GM43**YY			T3PM40GM43**YY			
		DuraLastomer®	350	Sleeve	07SU40GL90**YY			17SU40GL90**YY			75SU40GL90**YY			T3SU40GL90**YY			
		Polyon AL™	350	Annular	07PA40GL43**YY			17PA40GL43**YY			75PA40GL43**YY			T3PA40GL43**YY			
		Hard Rubber	300	Plain	07HR40GB82**YY			17HR40GB82**YY			75HR40GB82**YY			T3HR40GB82**YY			
		Hard Rubber	300	Ball	07HR40GB42**YY			17HR40GB42**YY			75HR40GB42**YY			T3HR40GB42**YY			
		Polyolefin	300	Plain	07PO40G+82**YY			17PO40G+82**YY			75PO40G+82**YY			T3PO40G+82**YY			B,Z
		Polyolefin	350	Sleeve	07PO40G+90**YY			17PO40G+90**YY			75PO40G+90**YY			T3PO40G+90**YY			J,Z
		Polyolefin	350	Ball	07PO40GZ42**YY			17PO40GZ42**YY			75PO40GZ42**YY			T3PO40GZ42**YY			
		H.D Polyolefin	350	Plain	07HP40G+82**YY			17HP40G+82**YY			75HP40G+82**YY			T3HP40G+82**YY			B,E,Z
		Nylon	350	Sleeve	07NY40GE90**YY			17NY40GE90**YY			75NY40GE90**YY			T3NY40GE90**YY			
		Nylon	350	Ball	07NY40GE42**YY			17NY40GE42**YY			75NY40GE42**YY			T3NY40GE42**YY			
		Phenolic	350	TopHats	07PH40GB99**YY			17PH40GB99**YY			75PH40GB99**YY			T3PH40GB99**YY			
		H.T. Phenolic	200	Top Hats	07HT40GQ99**YY			17HT40GQ99**YY			75HT40GQ99**YY			T3HT40GQ99**YY			
		BrimStone®	300	Top Hats	07GN40GQ99**YY			17GN40GQ99**YY			75GN40GQ99**YY			T3GN40GQ99**YY			
		SteROLLizer® AL	200	Top Hats	07BF40GC99**YZ			17BF40GC99**YZ			75BF40GC99**YZ			T3BF40GC99**YZ			
		Semi-Steel	300	Plain	07SS40GS82**YY			17SS40GS82**YY			75SS40GS82**YY			T3SS40GS82**YY			
		Semi-Steel	300	Sleeve	07SS40GS90**YY			17SS40GS90**YY			75SS40GS90**YY			T3SS40GS90**YY			
	1-1/2	Polyon™	350	Roller							75PU40H+03**YZ						G,V
		Polyon AL™	350	Roller							75PA40H+03**YZ						N,R
		Polyolefin	350	Roller							75PO40HB03**YZ						
		Phenolic	350	Sleeve							75PH40HB90**YY						
		Phenolic	350	Roller							75PH40HB03**YZ						
		H.T. Phenolic	350	Sleeve							75HT40HQ90**YY						
		BrimStone®	350	Sleeve							75GN40HQ90**YY						
		SteROLLizer® AL	275	Prec. BB							75BF40HC62**YY						
5	1-1/4	Soft Rubber	250	Plain	07SR50GB82**YY	6	4	17SR50GB82**YY	6-1/8	4-5/16	75SR50GB82**YY	6-1/8	3-7/8	T3SR50GB82**YY	6-1/8	4-7/8	
		Soft Rubber	275	Ball	07SR50GB42**YY			17SR50GB42**YY			75SR50GB42**YY			T3SR50GB42**YY			
		Rubber / Aluminum	275	Annular	07RA50GI43**YY			17RA50GI43**YY			75RA50GI43**YY			T3RA50GI43**YY			
		Nomadic™	325	Ball	07NM50GI43**YY			17NM50GI43**YY			75NM50GI43**YY			T3NM50GI43**YY			
		Thermo-Pro™	300	Ball	07TP50GI44**YY			17TP50GI44**YY			75TP50GI44**YY			T3TP50GI44**YY			
		Thermo-Pro™	300	Ball	07TP50G+47**YY			17TP50G+47**YY			75TP50G+47**YY			T3TP50G+47**YY			T,Y
		Thermo-Pro™	300	Sleeve	07TP50G+90**YY			17TP50G+90**YY			75TP50G+90**YY			T3TP50G+90**YY			T,Y
		Poly-Pro™	300	Ball	07PP50G+42**YY			17PP50G+42**YY			75PP50G+42**YY			T3PP50G+42**YY			A,D,I,K,P,W
		Poly-Pro™	300	Ball	07PP50G+44**YY			17PP50G+44**YY			75PP50G+44**YY			T3PP50G+44**YY			A,D,I,S,V
		Poly-Pro™	300	Delrin	07PP50G+55**YY			17PP50G+55**YY			75PP50G+55**YY			T3PP50G+55**YY			K,W
		Poly-Pro™	300	Ball	07PP50GP42**YY			17PP50GP42**YY			75PP50GP42**YY			T3PP50GE42**YY			
		Poly-Pro™	300	Ball	07PP50G+47**YY			17PP50G+47**YY			75PP50G+47**YY			T3PP50G+47**YY			T,W,Y
		Poly-Pro™	300	Sleeve	07PP50G+90**YY			17PP50G+90**YY			75PP50G+90**YY			T3PP50G+90**YY			T,Y
		Polymadic™	340	Annular	07PM50GM43**YY			17PM50GM43**YY			75PM50GM43**YY			T3PM50GM43**YY			
		DuraLastomer®	350	Sleeve	07SU50GL90**YY			17SU50GL90**YY			75SU50GL90**YY			T3SU50GL90**YY			
		Polyon AL™	350	Annular	07PA50GL43**YY			17PA50GL43**YY			75PA50GL43**YY			T3PA50GL43**YY			
		Hard Rubber	325	Plain	07HR50GB82**YY			17HR50GB82**YY			75HR50GB82**YY			T3HR50GB82**YY			
		Hard Rubber	350	Ball	07HR50GB42**YY			17HR50GB42**YY			75HR50GB42**YY			T3HR50GB42**YY			
		Polyolefin	350	Plain	07PO50G+82**YY			17PO50G+82**YY			75PO50G+82**YY			T3PO50G+82**YY			B,Z
		Polyolefin	350	Sleeve	07PO50G+90**YY			17PO50G+90**YY			75PO50G+90**YY			T3PO50G+90**YY			J,Z
		Polyolefin	350	Ball	07PO50GZ42**YY			17PO50GZ42**YY			75PO50GZ42**YY			T3PO50GZ42**YY			
		H.D Polyolefin	350	Plain	07HP50G+82**YY			17HP50G+82**YY			75HP50G+82**YY			T3HP50G+82**YY			B,E
		Nylon	350	Sleeve	07NY50GE90**YY			17NY50GE90**YY			75NY50GE90**YY			T3NY50GE90**YY			
		Nylon	350	Ball	07NY50GE42**YY			17NY50GE42**YY			75NY50GE42**YY			T3NY50GE42**YY			
		Phenolic	350	Top Hats	07PH50GB99**YY			17PH50GB99**YY			75PH50GB99**YY			T3PH50GB99**YY			
		H.T. Phenolic	300	Top Hats	07HT50GQ99**YY			17HT50GQ99**YY			75HT50GQ99**YY						
		BrimStone®	350	Top Hats	07GN50GQ99**YY			17GN50GQ99**YY			75GN50GQ99**YY						
		Semi-Steel	350	Plain	07SS50GS82**YY			17SS50GS82**YY			75SS50GS82**YY			T3SS50GS82**YY			
6	1-1/4	Poly-Pro™	300	Ball							75PP60G+44**YY	7-1/16	4	T3PP60G+44**YY	6-31/32	4-7/8	A,I
		Poly-Pro™	300	Delrin							75PP60G+55**YY			T3PP60G+55**YY			A,K,W
		Poly-Pro™	300	Ball							75PP60G+47**YY			T3PP60G+47**YY			T,Y
		Poly-Pro™	300	Sleeve							75PP60G+90**YY			T3PP60G+90**YY			T,Y
		Thermo-Pro™	300	Ball							75TP60GI44**YY			T3TP60GI44**YY			
		Thermo-Pro™	300	Ball							75TP60G+47**YY			T3TP60G+47**YY			T,Y
		Thermo-Pro™	300	Sleeve							75TP60G+90**YY			T3TP60G+90**YY			T,Y
6-1/4		Cushion-Ride™	200	Ball										T3CR60G+42**YY	7-1/16	4-7/8	A,I

STEM DRAWINGS CASTERS

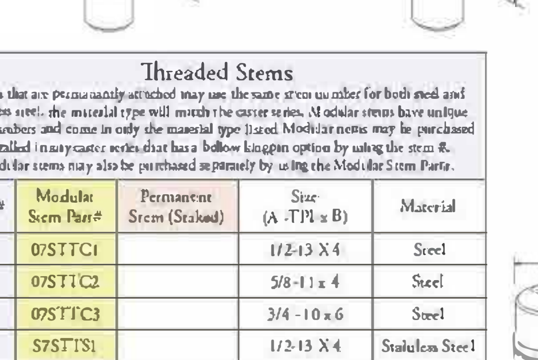

Square & Round Stems with Cross Drilled Holes (*41 Octagon with grip ring & crossdrilled hole)									
Stem #	Modular Stem Part#	Permanent Stem (Staked)	Measurement Specifications A	B	C	D	E	F	Material
*41		Yes	.865	2-1/4	NA	NA	.97	None	Steel
*41	S7STO41	Yes	.865	2-1/4	1-1/8	NA	.97	5/16	Stainless
42		Yes	7/8	2	1	NA	.983	5/16	Steel
43	07STS43		.57	2.92	5/8	3/8	.73	5/16	Steel
51	S7STS51		3/4	2	1	1-1/4	1-1/32	1/4	Stainless
55	07STS55		.87	2	1	1-1/2	1.087	1/4	Steel
56	07STS56		.87	2	1	1-1/2	.983	1/4	Steel
57	S7STR57		3/4	2	1	1-1/4	NA	1/4	Stainless

Threaded Stems

Stems that are permanantly attached may use the same stem number for both steel and stainless steel, the material type will match the caster series. Modular stems have unique part numbers and come in only the material type listed. Modular stems may be purchased installed in any caster series that has a hollow kingpin option by using the stem #. Modular stems may also be purchased separately by using the Modular Stem Part#.

Stem #	Modular Stem Part#	Permanent Stem (Staked)	Size (A -TPI x B)	Material
C1	07STTC1		1/2-13 X 4	Steel
C2	07STTC2		5/8-11 x 4	Steel
C3	07STTC3		3/4 -10 x 6	Steel
S1	S7STTS1		1/2-13 X 4	Stainless Steel
S2	S7STTS2		5/8-11 x 4	Stainless Steel
S3	S7STTS3		3/4 -10 x 6	Stainless Steel
S4	S7STTS4		3/4 -10 x 8	Stainless Steel
S5	S7STTS5		3/4 -10 x 10	Stainless Steel
31		Yes	5/16-18x1	Steel
32		Yes	5/16-18X3/4	Steel
33	07STT33		7/16-14 x 1-1/2	Steel
59		Yes	1/2-13 x 1-3/4	Steel
60		Yes	3/8-16 x 3/4	Steel
61		Yes	3/8-16 x 1	Steel
62		Yes	3/8-16 x 1-1/2	Steel
63		Yes	3/8-16 x 1/2	Steel
64		Yes	3/8-16 x 1-3/8	Steel
66		Yes	1/2-13 x 3/4	Steel
67		Yes	1/2-13 x 1	Steel & Stainless Steel
68		Yes	1/2-13 x 1-1/2	Steel & Stainless Steel
69		Yes	1/2-13 x 2	Steel
70		Yes	1/2-13 x 2-3/4	Steel & Stainless Steel
79	07STT79	Yes	7/16-14 x 2-1/4	Steel
80		Yes	5/8-11 x 1	Steel
81	07STT81		5/8-11 x 1-3/4	Steel
84	07STT84		3/4-10 x 4	Steel
87	07STT87		3/4-10 x 1-3/4	Steel
88		Yes	3/4-10 x 1	Steel

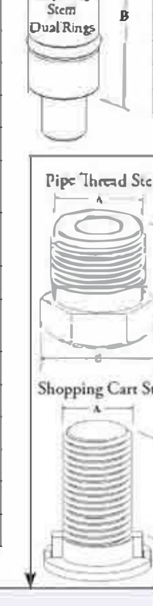

Grip Ring Stem Specifications						
Stem Type	Stem #	Modular Stem Part#	Permanent Stem (Staked)	Measurement Specs A	B	Material
1 Ring	53		Yes	7/16	7/8	Steel
1 Ring	54		Yes	3/8	1	Steel
1 Ring	90		Yes	7/16	1-3/16	Steel
1 Ring	91	07STT91	Yes	7/16	1-3/8	Steel
1 Ring	91	S7STT91		7/16	1-3/8	Stainless
Dual Rings	92	07STG92		5/8	2-3/16	Steel
Dual Rings	93	07STG93		13/16	2-3/16	Steel
1 Ring	94		Yes	27/32	2-1/2	Steel
1 Ring	95		Yes	.846	2-3/16	Steel
1 Ring	95	S7STG95		.846	2-3/16	Stainless
1 Ring	96		Yes	13/16	1-3/4	Steel
1 Ring	97		Yes	7/16	2	Steel

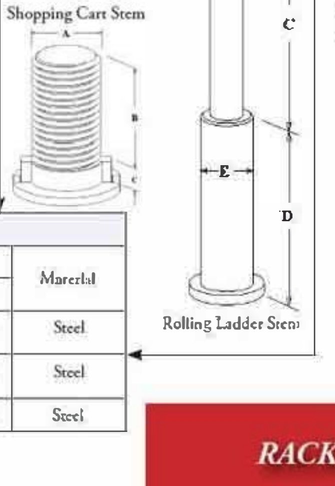

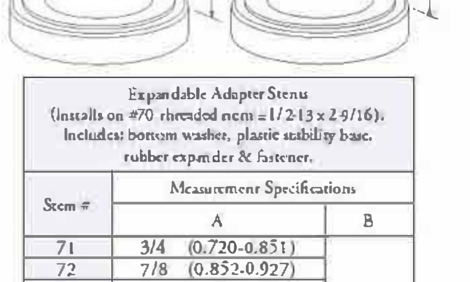

Stem Specifications							
Stem #	Stem Type	Measurement Specifications A	B	C	D	E	Material
SC	Threaded (for Shopping Cart) with Key lock base.	1/2-13	3/4	1/8	NA	NA	Steel
86	Pipe Thread 3/4 NPT, (Fits standard 3/4" pipe coupling)	1-1/6 Approx.	3/4	1	NA	NA	Steel
L1	Ladder Caster	5/16	3/4	2-1/4	1-13/16	.52	Steel

Expandable Adapter Stems (Installs on #70 threaded stem = 1/2-13 x 2-9/16). Includes: bottom washer, plastic stability base, rubber expander & fastener.

Stem #	Measurement Specifications A	B
71	3/4 (0.720-0.851)	Approx. 2-5/16"
72	7/8 (0.852-0.927)	
73	1 (0.928-1.029)	
74	1-1/8 (1.030-1.140)	
75	1-3/8 (1.360-1.425)	
76	1-1/2 (1.426-1.589)	
77	1-7/8 (1.790-1.850)	